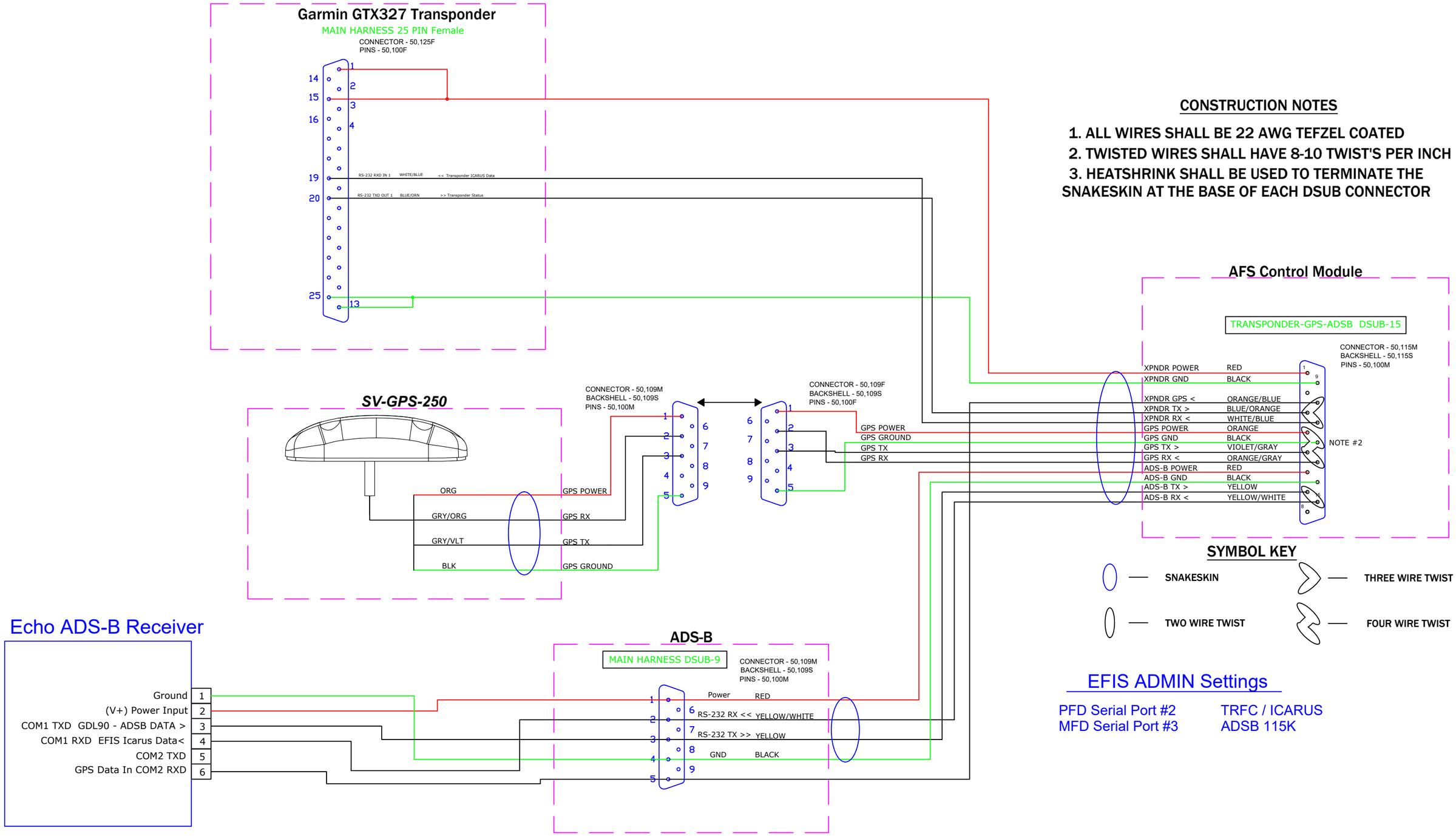

CONSTRUCTION NOTES

1. ALL WIRES SHALL BE 22 AWG TEFZEL COATED
2. TWISTED WIRES SHALL HAVE 8-10 TWIST'S PER INCH
3. HEATSHRINK SHALL BE USED TO TERMINATE THE SNAKESKIN AT THE BASE OF EACH DSUB CONNECTOR

EFIS ADMIN Settings

PFD Serial Port #2	TRFC / ICARUS
MFD Serial Port #3	ADSB 115K

ITEM	QTY	PART #	DESCRIPTION

NOTES:

REV	DATE	DESCRIPTION	REV BY
1	10/29/21	Initial Drawing	RJH

DATE 1/20/22 SCALE NONE
DRN. RJH APRV. RJH

This drawing is the property of Advanced Flight Systems Inc. and contains confidential information. It is not to be copied, reproduced or used without written approval.

ADVANCED FLIGHT SYSTEMS INC.
PHONE: (503) 263-0037 FAX: (503) 263-1138
320 REDWOOD ST
CANBY, OR 97013

TITLE GTX327, Echo UAT to ACM
P/N 57507
A
REV. 1