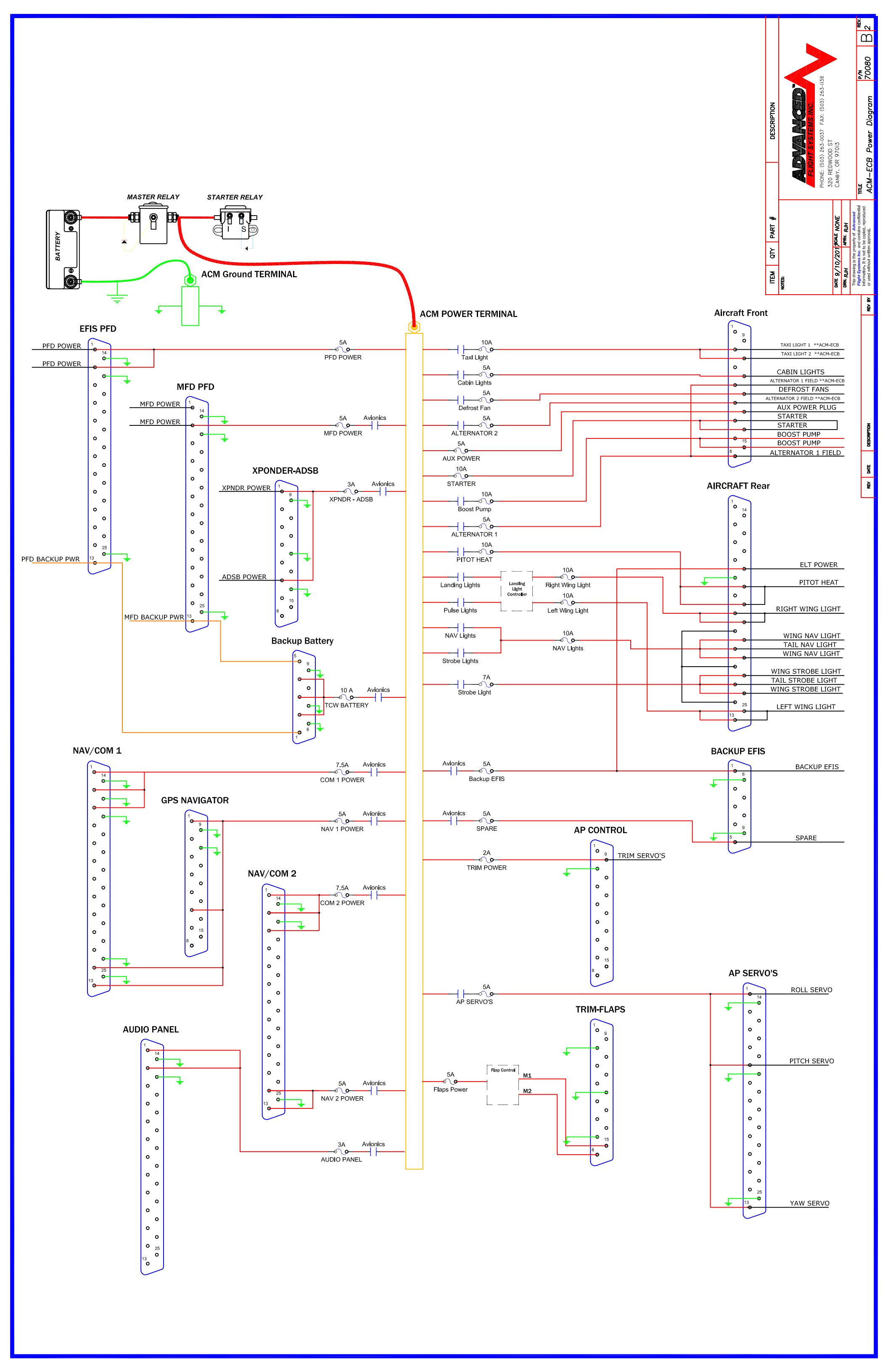
MASTER RELAY
STARTER RELAY
BATTERY
ACM Ground TERMINAL
ACM POWER TERMINAL
EFIS PFD
PFD POWER
PFD POWER
PFD BACKUP PWR
MFD PFD
MFD POWER
MFD POWER
MFD BACKUP PWR
XPONDER-ADSB
XPNDR POWER
ADSB POWER
Backup Battery
10 A
TCW BATTERY
NAV/COM 1
GPS NAVIGATOR
NAV/COM 2
AUDIO PANEL
5A
PFD POWER
5A
MFD POWER
Avionics
3A
XPNDR - ADSB
7.5A
COM 1 POWER
5A
NAV 1 POWER
7.5A
COM 2 POWER
5A
NAV 2 POWER
3A
AUDIO PANEL
10A
Taxi Light
5A
Cabin Lights
5A
Defrost Fan
5A
ALTERNATOR 2
5A
AUX POWER
10A
STARTER
10A
Boost Pump
5A
ALTERNATOR 1
10A
PITOT HEAT
Landing Lights
Pulse Lights
Landing Light Controller
10A
Right Wing Light
10A
Left Wing Light
NAV Lights
Strobe Lights
10A
NAV Lights
7A
Strobe Light
Avionics
5A
Backup EFIS
Avionics
5A
SPARE
2A
TRIM POWER
5A
AP SERVO'S
5A
Flaps Power
Flap Control
M1
M2
Aircraft Front
TAXI LIGHT 1 **ACM-ECB
TAXI LIGHT 2 **ACM-ECB
CABIN LIGHTS
ALTERNATOR 1 FIELD **ACM-ECB
DEFROST FANS
ALTERNATOR 2 FIELD **ACM-ECB
AUX POWER PLUG
STARTER
STARTER
BOOST PUMP
BOOST PUMP
ALTERNATOR 1 FIELD
AIRCRAFT Rear
ELT POWER
PITOT HEAT
RIGHT WING LIGHT
WING NAV LIGHT
TAIL NAV LIGHT
WING NAV LIGHT
WING STROBE LIGHT
TAIL STROBE LIGHT
WING STROBE LIGHT
LEFT WING LIGHT
BACKUP EFIS
BACKUP EFIS
SPARE
AP CONTROL
TRIM SERVO'S
TRIM-FLAPS
AP SERVO'S
ROLL SERVO
PITCH SERVO
YAW SERVO
ITEM
QTY
PART #
DESCRIPTION
NOTES:
ADVANCED FLIGHT SYSTEMS INC.
PHONE: (503) 263-0037 FAX: (503) 263-1138
320 REDWOOD ST
CANBY, OR 97013
DATE 9/10/201
SCALE NONE
DRN. RJH
APRV. RJH
This drawing is the property of Advanced Flight Systems and contains confidential Information. It is not to be copied, reproduced or used without written approval.
TITLE
ACM-ECB Power Diagram
P/N 70080
REV. B2
REV BY
DESCRIPTION
DATE
REV