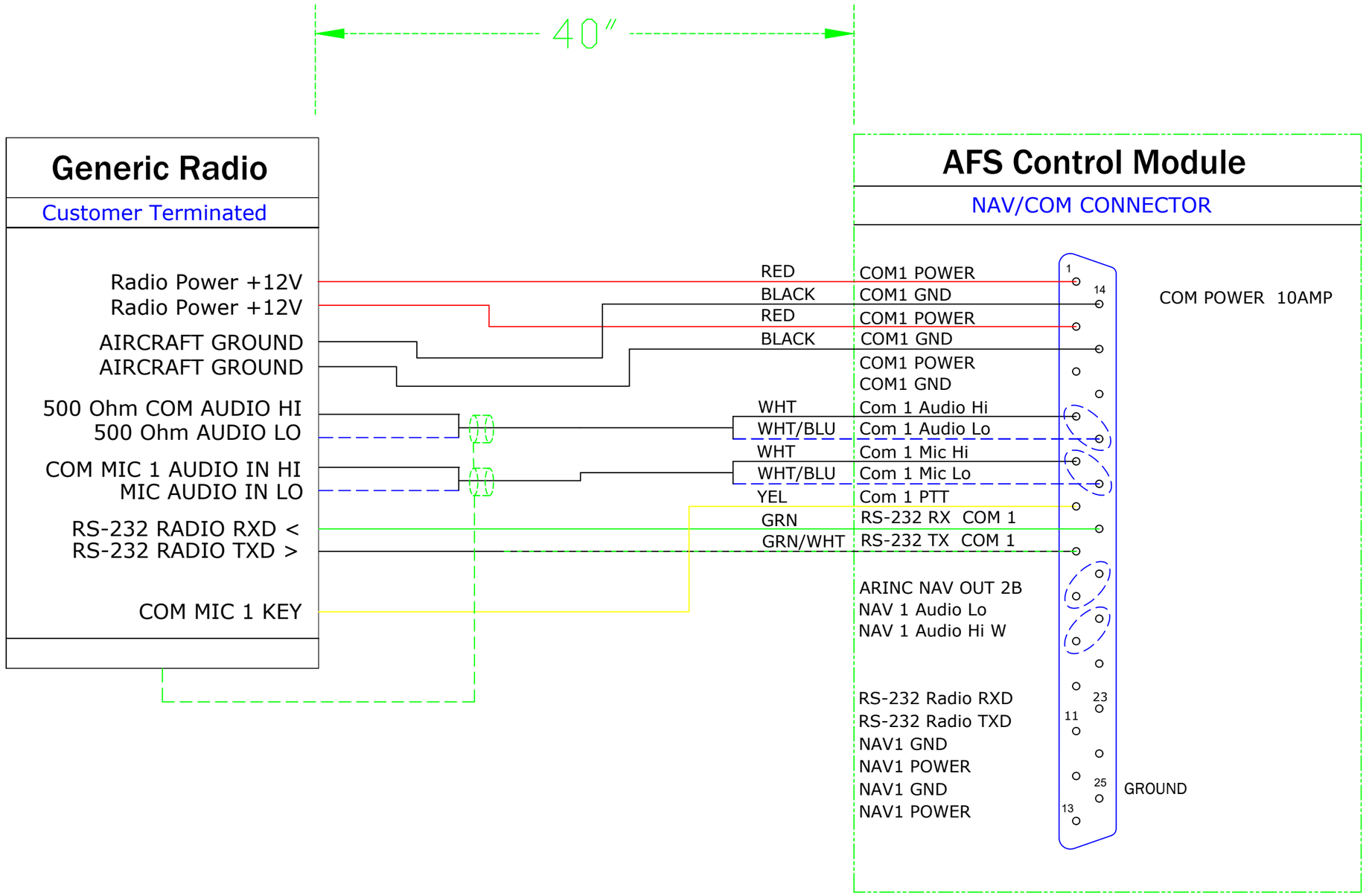

ITEM	QTY	PART #	DESCRIPTION

NOTES:

ADVANCED FLIGHT SYSTEMS INC.
PHONE: (503) 263-0037 FAX: (503) 263-1138
320 REDWOOD ST
CANBY, OR 97013

REV	DATE	DESCRIPTION	REV BY
1	1/21/22	Original Drawing	RJH

DATE 1/21/22 SCALE NONE
DRN. RJH APRV. RJH

This drawing is the property of Advanced Flight Systems Inc. and contains confidential information. It is not to be copied, reproduced or used without written approval.

TITLE ACM Generic Radio Harness
P/N 57695
B
REV. 1